A FRAMEWORK FOR UNCOVERING THE WAY A TEXTBOOK MAY POSITION THE MATHEMATICS LEARNER

BETH HERBEL-EISENMANN, DAVID WAGNER

> The equations below express the relationship between a person's height, H, and femur length, F:
>
> Males: H = 27.5 + 2.24F
>
> Females: H = 24 + 2.32F
>
> […] If a man's femur is 20 inches long, about how tall is he? (Lappan, Fey, Fitzgerald, Friel and Phillips, 1998, p. 21)

Students could respond in many ways to this prompt from a mathematics textbook. They might just answer the questions in the expected way, or they might pose further questions. These questions could be mathematical or about mathematics, such as the following: Who found these equations? How? Why would someone want to use these equations? For whom and why am I finding the man's height? Should my answer depend on the situation?

Using tools and concepts from discourse analysis we demonstrate a framework for examining the way a textbook might influence a mathematics learner's experience of mathematics. We are interested in the way the form of textbook language and accompanying images might position students in relation to mathematics, to their classmates, to their teachers and to their world outside of the classroom. Though the typical student's experience of a textbook is mediated by strong influences, including the teacher who prescribes the textbook and the school culture, the form of the textbook itself is significant (Otte, 1986). As researchers interested in discourse, ideology, and power, we assert the importance of understanding the way students are positioned by mathematics textbooks and offer one way to examine such positioning.

The milieu of a classroom comprises teachers, students, and textbooks. Within this milieu, the student's position in the classroom setting is complex: it is affected by both local and global discourses and also by both the individual words spoken and written by others and the system of these words taken together. Thus the interpretation that underpins our framework requires both 'zooming in' and 'zooming out.' When examining a textbook, we recognize that textbooks can be examined as wholes made up of parts. It is important to interrogate the text word-by-word, sentence-by-sentence, and section-by-section to identify and classify particular linguistic forms. But, it is also important to consider these linguistic forms as parts of a whole (each word is part of a sentence as well as part of a section within a unit) and interpret the function of language forms in their textual contexts. Throughout this article, we describe particular linguistic forms but use their location to interpret what they might mean for a reader.

To illustrate this textbook analysis framework, we take examples from our analyses of two particular textbooks. We draw upon our more extensive analysis of a unit from the *Connected Mathematics Project* (CMP), *Thinking with Mathematical Models* (TMM) (Lappan *et al.*, 1998) as well as some analysis we have done of the University of Chicago *School Mathematics Project*'s (UCSMP) book entitled *Algebra* (McConnell *et al.*, 1998). While we recognize that these particular curriculum materials are used primarily in the US, our textbook choices are irrelevant in the sense that our framework could be illustrated with any textbook. However, we believe that using examples clarifies the framework better than abstract statements could. For a more detailed analysis of TMM and of some of these linguistic tools see Herbel-Eisenmann (in press). In our analyses of these texts, we focused attention on words and phrases that constructed roles for the reader in relationship with other people and with mathematics from a particular epistemological stance.

Our framework

Our framework is not an end in itself. Our intention in this article is to model critical evaluation of mathematics textbooks. We have chosen the word framework because we provide a structure for questioning what a mathematics educator might bring to a textbook. This word also makes it clear that our approach is one among other powerful critical approaches, including Dowling's (1998) approach, which is underpinned by Basil Bernstein's sociology, and McBride's (1989; 1994) Foucauldian approach. Both of these approaches, unlike ours, are oriented toward declaring a verdict on a textbook's effect.

We introduce a perspective-opening framework to mathematics textbook consideration. Typically, textbooks are taken to index mathematical content. The verbal, diagrammatic and pictorial symbols are taken as transparent pointers to mathematical ideas. While acknowledging that this is appropriate, we assert the value of drawing attention to the symbols themselves. Such a turn of attention has underpinned significant mathematics education scholarship – including attention to the nature of mathematical symbols (Radford, 2002), the pragmatics of grammar (Rowland,

For the Learning of Mathematics **27**, 2 (July, 2007)
FLM Publishing Association, Edmonton, Alberta, Canada

1992, 1999) and the genres of mathematical expression (Gerofsky, 1996).

In Adler's (1998) accounts of tensions faced by mathematics teachers (tensions exacerbated in multilingual contexts), she describes the dilemma of deciding when to direct attention to mathematical content and when to direct it to the language used to represent the content. It is not necessary to see the choice as mutually exclusive; we promote attention to linguistic form as it relates to mathematical content. Our framework is not about attending to linguistic structure *instead of* mathematical content. [1] Attention to the relationship helps us understand both the content and the language practice.

Our framework is organized by a series of questions. With these questions we explore how the things that they allow us to see relate to the things we typically see (mathematical content):

1. How might a textbook position students in relation to mathematics?
2. How might a textbook position students in relation to their peers?
3. How might a textbook position students in relation to their teacher?
4. How might a textbook position students in relation to other people?
5. How might a textbook position students in relation to their own experiences?

Before illustrating a way to answer these questions, we address two other significant questions: Who should be asking the above questions? and Why might they do so? Though we are not saying who should be attending to textbook form in relation to mathematical content, we envision teachers doing this primarily. Teachers can also draw students into conversation about these things. Love and Pimm (1996), in their discussion about ways of looking at mathematics textbooks, point out the inherent authority of the text and remind teachers and students that together

> their responses to it may range from taking it for granted to seeing their role as challenging and criticizing it (to interrogate and even deconstruct the text). (p. 380)

This possibility available to teachers and students needs further research. Wagner (2007), in his attempt to raise the "critical language awareness" of a high-school mathematics class over a semester-long course, drew some attention to textbook language form but most of the class discussion about language focused on oral communication. We argue that the NCTM's (2000) move to make communication an "outcome" increases the importance of students noticing language.

An important word common to these questions is the word 'might'. With our questions, we are more interested in the 'range of possibility' than in classification for a few reasons. First, though we recognize that it would be convenient to have a framework that allows us to classify and thus recommend particular textbooks for use, we do not find linguistic analysis sufficient to make such classifications. We have some interest in noting what a text is but the complexity of text in relation to readers of diverse experience makes it difficult to nail down what a text is. We also have some concern for how texts might be improved, addressing questions about how they ought to be. However, our primary interest is to draw attention to possibilities that texts make available for educators. Second, we are more interested in supporting educators' use of textbooks than in influencing their choice of textbooks. There is a wide range of mathematical activities that can be prompted by a teacher using any particular textbook section. Johansson (2007) demonstrates some possibilities within this range in her description of a teacher interacting with students doing work from a textbook: the teacher can follow the textbook's assumptions and structuring, or question the assumptions and structuring to generate mathematical discussion. What might they do, and how might an educator's work be informed by an awareness of what texts can do? Supporting the textbook users' repertoire of uses may help them make informed choices between textbooks, even if this kind of support does not make easy choices possible. Third, there is value in considering a range of possible forms of a text, to support authors' choices when writing mathematics textbooks and teachers' choices when writing notes for their students.

The interrogation of textbooks using frameworks such as the one we present here can be complemented by the study of how textbooks are used in classrooms. In a recent review on mathematics teachers' use of curriculum materials, Remillard (2006) argued that there is a need for detailed work related to how teachers use curriculum materials. Some of the work Remillard writes about has focused on the relationship between the teacher and the textbook, viewing both as bringing agency to the teacher-curriculum relationship. That is, while the teacher brings, say, beliefs and knowledge to the use of curriculum and hence adapts it as he or she uses it, the textbook also brings particular knowledge and viewpoints about what school mathematics entails. We agree with Brown and Edelson (2003) and Lloyd (1999) who argue that in order to investigate teachers' use of curriculum materials it is necessary to interrogate the materials themselves.

Critical orientation

The investigation of possibility usually accompanies a critical agenda. Though the post-structuralist turn in scholarship would seem to favour research that investigates language, critical theorists deem most linguistic scholarship as structuralist (MacLure, 2003). There are, however, streams of linguistics in which some critical theorists identify sufficient recognition of subjectivity and of the impossibility of language being a neutral medium – including critical discourse analysis (CDA). CDA scholarship aims to support modification of language practices by drawing attention to alternative possibilities. In order to do this, scholarship needs to 'denaturalize' discursive practices – to compel change by asking questions that make apparently normal practice seem strange (Kress, 1990) and to empower participants in a discourse by uncovering for them (and perhaps with them, we add) a range of possible ways of living and participating within

the discourse. Fairclough (1995), like Kress, points to the CDA analyst's interest in the relative positioning of participants:

> Adopting critical goals means aiming to elucidate […] naturalizations, and more generally to make clear social determinations and effects of discourse which are characteristically opaque to participants. (p. 28) [2]

We read intention where it would appear that the textbook authors are instinctively following the traditions of the mathematics textbook genre. Kress (1993) makes it clear that whenever a writer writes, or a speaker speaks, they are making choices (not necessarily consciously) amongst alternative structure and content. MacLure (2003) supports Kress's assertion when she notes that poststructuralist reading cannot see language as innocent. Writers should be responsible for their conscious and unconscious choices.

Our framework's focus questions centre on this aspect of the discourse, the social positioning experienced by students. As we use the word 'positioning' we envision the textbooks as having agency, moving people around to form particular structures of relationship. This image is more than metaphoric, as the prescribed forms of interaction actually structure social settings, even the physical arrangement of classroom participants. In recent poststructuralist theorizing and investigations in mathematics education that have begun to address personal positioning within learning discourses, the interest has been in the person's relation or attitude to disciplines or communities of practice, not to other particular people. Our sense of a person's subjectivity leads us to be more interested in how a student relates to other people.

Language indirectly indexes particular dispositions, understandings, values, and beliefs. By examining the language choices authors make, we can see how they construct a model reader and position mathematics students. From this, we can infer the student's experience of mathematics.

Exemplifying the framework's questions

Authors' choices both reflect their sense of an ideal pedagogical situation and direct the development of a situation that resembles this ideal. [3] Thus, we argue that authors' linguistic choices are artefacts of both the discursive practice and the discursive system behind the practice. [4] These artefacts give us insight into mathematics education in general and they influence the development of mathematical thinking in situations that involve the text.

How might a text position students in relation to mathematics?

To develop an understanding of how people are positioned with respect to mathematics, we focus on two language forms – personal pronouns and modality – and accompanying images that substantiate these forms. With these forms, we see who the text recognises as the people associated with mathematics and how they stand in relation to the mathematics. First person pronouns (I and we) indicate an author's personal involvement with the mathematics. Textbook authors can use the pronoun 'I' to model an actual person doing mathematics, and can draw readers into the picture by using the pronoun 'we', though there is some vagueness with regard to whom 'we' refers (Pimm, 1987). The use of the second person pronoun 'you' also connects the reader to the mathematics because it speaks to the reader directly, though it can be used in a general sense, not referring to any person in particular (Rowland, 2000).

Morgan (1996) notes that the absence of first person pronouns obscures the presence of human beings in a text and affects

> not only […] the picture of the nature of mathematical activity but also distances the author from the reader, setting up a formal relationship between them. (p. 6)

In both example textbooks, first person pronouns were entirely absent. Two forms of the second person pronoun 'you' are common in mathematics textbooks:

1. 'you' + a verb
2. an inanimate object + an animate verb + 'you' (as direct object).

The first form, includes such phrases as 'you find', 'you know' and 'you think', with which the authors tell the readers about themselves, defining and controlling what linguists Edwards and Mercer (1987) call the "common knowledge". The textbook authors use such control to point out the mathematics they hope (or assume) the students are constructing. Most uses of 'you' in the TMM and the UCSMP texts fit this first structure.

The second of these constructions (an inanimate object + an animate verb + 'you' (as direct object)) structures striking examples of obscured human subjectivity. Inanimate objects perform activities that are typically associated with people, masking human agency – for example, 'The graph shows you…' and 'The equation tells you...'. In reality it is not the graph but the person who is reading the graph who determines what the graph 'shows'. This type of obfuscation depicts an absolutist image of mathematics, portraying mathematical activity as something that can occur on its own, without humans. This image can be mitigated by other features that showcase human agency, for example, TMM refers to human actors in the mathematical problems. These actors are named by occupation, by group ('riders on a bike tour'), or by fictional name ('Chantal'). The combination of hidden agency alongside human actors may send mixed messages to a reader about the role of human beings in mathematics.

Though the paucity of personal pronouns and the absence of first person pronouns 'I' and 'we' is typical of mathematics textbooks, we are reminded that this need not be so. For example, we know of two mathematics textbooks that employ an 'I' voice. Zimmer *et al.* (2000) include examples of students' thoughts, which use the 'I' voice, and Frankenstein's (1989) book *Radical maths*, uses the 'I' voice in more diverse ways, but this book is an atypical textbook in many other ways, too.

The modality of a text also points to the text's construction of the role of humans in relation to mathematics. The modality of the text includes "indications of the degree of likelihood, probability, weight or authority the speaker

attaches to an utterance" (Hodge and Kress, 1993, p. 9). Modality can be found in the "use of modal auxiliary verbs (must, will, could, etc.), adverbs (certainly, possibly) or adjectives (e.g., I am sure that…)" (Morgan, 1996, p. 6). With such forms, the text suggests that mathematics is something that people can be sure about (for example, with the adverb 'certainly') or that people can imagine possibilities within mathematics (*e.g.*, with the adverb 'possibly').

Linguists use the term 'hedges' to describe words that index uncertainty. For instance, because of the hedge 'might' in 'That function might be linear,' there is less certainty than in the unhedged 'That function is linear.' Some hedges in TMM are 'about', 'might' and 'may'. This kind of hedging could raise questions about the certainty of what is being expressed and could also, as Rowland (2000) asserts, open up for readers an awareness of the value of conjecture.

Modality also appears in verb choice. Strong modal verbs coupled with a paucity of hedging suggest that mathematical knowledge can be and ought to be expressed with certainty. Such an absolutist image suggests that mathematics is not contingent on human particularities. What role would this give the student? In TMM, for example, a voice of certainty is expressed because the verbs that express stronger conviction (would, can, and will) are much more common than those that communicate weaker conviction (could and should). The UCSMP seems to privilege strong modality even more by including relatively less modal verbs, by using a higher proportion of strong modal verbs, and by using the very strong modal verb 'must', which does not appear in TMM.

Pictures alongside verbal text impact the reader's experience of the text, just as text colours the reader's interpretation of pictures. For instance, we can compare 'generic' drawings and 'particular' photographs. To illustrate, a drawing of a boy could represent any boy [5], whereas a photograph of a boy is a representation of only the one boy in the photograph. A comparison between drawings and photographs is more significant when seen in relation to linguistic features that have similar effects. For example, TMM's preference for the more generic drawings is substantiated by its paucity of personal pronouns. Together, these features may draw attention to mathematics' penchant for generality. However, this image is mitigated somewhat by some photographs and, as stated above, by some references to humans in word problems.

This obfuscation can be heightened by an absence of people in the graphic images. Attention to the roles played by the people in the images also affects the student's sense of how people relate to mathematics. In the TMM text, for example, only one quarter of the images have people in them. In these, we find people playing on teeter-totters and operating cranes (among other things), but only one image of a person doing mathematics. Significantly, this image is a drawing (which makes the person generic) and it only shows the person's hand conducting a mathematical investigation (Figure 1). This disembodied, generic hand may parallel the missing face of the mathematician in agency-masking sentences, but it may also be taken as an invitation to the reader to imagine his or her own hand operating in

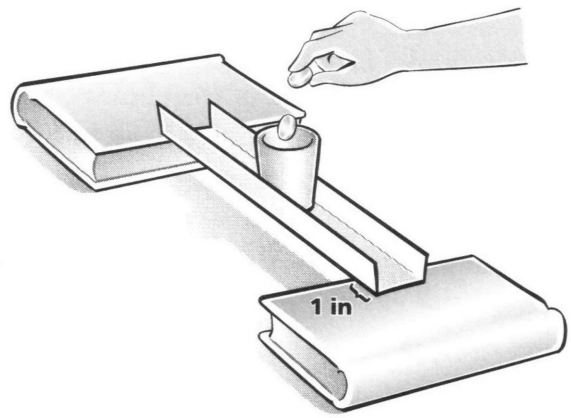

Figure 1: A hand doing mathematics (Lappan et al., 1998, p. 6)

the diagram's environment. [6] Indeed, the loss of particularity in agency-masked renderings is inherently related to the development of generality. A reader can experience both interpretations simultaneously even though they might appear to be conflicting.

By contrast to the image of the person conducting the mathematical investigation, TMM also has an image of mathematics being done on a person – a man is being measured (Figure 2). Here, the person is a generic adult male (and so not the model reader) who is the subject of mathematics, but there is no indication in the drawing, or the relevant verbal text, that suggests a person is doing the mathematics. Perhaps the reader can infer that he is doing the mathematics to himself.

How might a text position students in relation to other people?

Most students learn mathematics within a social environment. Recognizing, as shown by Johansson (2007), that the teacher can position a textbook in various ways, we add that the textbook also positions students and teachers in various

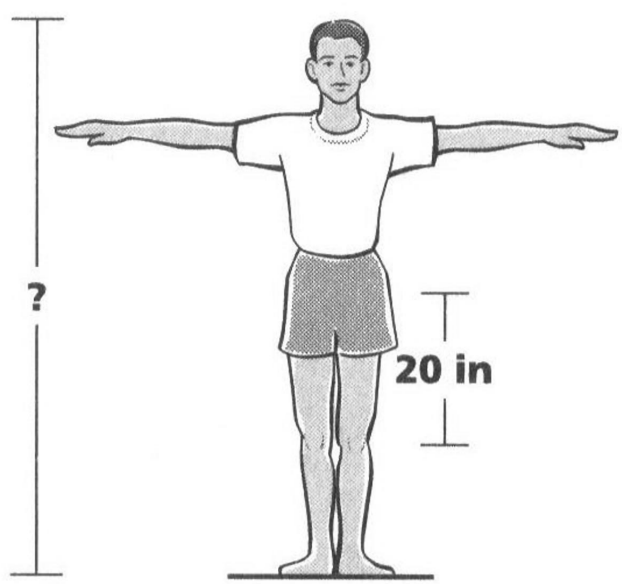

Figure 2: A man subject to mathematics (Lappan et al., 1998, p. 21)

ways. Given their experience of their classroom community, we ask how the text positions students in relation to the people around them – their teachers and their peers. [7] Various aspects of the text, including the ways the authors directly address the reader, position the model student in relation to these people.

Mathematics seems to address the student literally, with sentences structured in the imperative mood. Morgan (1996) asserts such imperatives (or commands) tacitly mark the reader as a capable member of the mathematics community. However, we suggest that such positioning is not clear from the mere presence of imperatives. Rotman (1988) distinguishes between what he calls inclusive imperatives (describe, explain, prove), which ask the reader to be a thinker, and what he calls exclusive imperatives (write, calculate, copy), which ask the reader to be a scribbler. Mathematicians do both, they think and scribble. We find significance in Rotman's terms: inclusive and exclusive. The 'thinker' imperatives construct a reader whose actions are included in a community of people doing mathematics, whereas the 'scribbler' imperatives construct one whose actions can be excluded from such a community. The student who scribbles can work independent from other people (including teacher and peers).

We caution against premature characterization of a text based only on the number or percentage of these different kinds of imperatives. When we follow the flow of imperatives in a text, we can form a better picture of the model student constructed by it. For example, in TMM's initial 'investigation,' we find the following stream of imperatives (pp. 5, 6): 'make a bridge', 'fold the paper', 'suspend the bridge', 'place the cup', 'put pennies in', 'record the number', 'put strips together', 'find the weight', 'repeat', 'do the experiment', 'make a table', 'graph your data', 'describe the pattern', 'suppose you use'. Of these 14 imperatives, the first 12 are exclusive and the last two inclusive. Does this mean that scribbling is privileged over thinking because of the ratio 12:2? No. Though this ratio of 6:1 is not significantly different from the UCSMP ratio of approximately 10:1, the UCSMP positioning of 'thinker' imperatives as part of independently worked 'exercises' and without directions for scribbling first may mitigate their inclusive effect. It is appropriate to scribble before thinking. Furthermore, if a text makes too many 'thinker' demands, it could be tacitly encouraging students to jump from one thought to another without dwelling on any of the 'thinker' demands.

This raises a further question about the model students' relations to the people around them. It is important to see whether a textbook mentions that other people need to be considered when students engage in the thinking imperatives. Looking again at the closing imperatives in the above TMM sequence, we note that a student could ask, 'Describe? Describe to whom?' The same goes for TMM's most prevalent 'thinker' imperative: 'explain'. If the students are expected to explain their reasoning, they might reasonably expect some direction from the text with regard to their audience.

Exceptions to this absence of reference to the people around the model student must be investigated. [8] For example, at the end of each section in TMM, the text includes a page called *Mathematical reflections*. In each of these sections, the same sentence follows the prompts for reflection:

> Think about your answers to these questions, discuss your ideas with other students and your teacher, and then write a summary of your findings in your journal. (*e.g.*, p. 25)

From this, the model student might see himself or herself doing mathematics independently, but reflecting on his or her mathematics in community.

How might a text position students in relation to their experience of the world?

While we suggest that explicit linguistic reference to the student's audience would be appropriate in a mathematics textbook, we recognise that such reference may raise further questions. As soon as a student is led to explain something to other people, he or she is likely to require a reason and context for the explanation. He or she would want to tailor their explanation to the situation and the people's needs within the situation.

Though mathematics textbooks may place the mathematics in 'real life' contexts (with few exceptions), linguistic and other clues can still point to an insignificant relationship between the student and his or her world. Attending to the particular instances of low modality (expressing low levels of certainty) with those of high modality, we begin to see what experiences the text foregrounds. First, we look at references to the student's past experiences. Textbooks may refer with uncertainty to the student's experiences outside the classroom using hedging words like probably or might – for example, when referring students to their experiences with a teeter-totter TMM tells the student, "You might have found the balance point by trial and error" (p. 28). However, the text expresses certainty about the student's abstract mathematical experiences, as in "In your earlier work, you saw that linear relationships can be described by equations" (p. 9). There are pragmatic reasons for such assertions. The authors must work under the assumption that the student has learned particular mathematical ideas before they can move on to the next section. Yet, the authors cannot really know who their readers are. TMM's authors hedge statements about students' experiences to acknowledge this. We are left wondering what message the model reader might take away from this. Would the reader think that his or her everyday experiences matter less than their mathematical experiences?

This kind of suggestion can be substantiated by word problem settings. Though most problems are situated in everyday contexts, the sequencing of problems in mathematics textbooks can jump from one setting to another. For example, in TMM's first set of "applications, connections and extensions" (pp. 15f), the student is asked to exercise his or her mathematics on bridge design, bus trip planning, economic forecasting, fuel monitoring, and the list goes on. Similar to our point about well-placed inclusive imperatives to promote students' thoughtfulness, we suggest that longer series of problems relating to a particular context would guide students to see real life in its complexity, as opposed to

operating on the basis of brief glimpses of small-scoped data sets. Unlike TMM's problem sets and unlike the UCSMP contexts, TMM's 'investigations' do dwell longer on given problem contexts.

Reflections

We have already noted above the impossibility of nailing down the effect of a textbook authors' linguistic choices (*e.g.*, the ratio of inclusive to exclusive imperatives has significance but the positioning of these imperatives is also important). In addition to this kind of limitation, there are limitations inherent in using commercially published texts, which by their nature ignore particularities of context and human individuality by reaching for a general audience. This sense of depersonalisation is heightened by the textbook's intended use – as a guidebook to help children develop predetermined outcomes.

Furthermore, the sense of detachment that might appear in mathematics textbooks should come as no surprise because mathematics is characterised by abstraction: Balacheff (1988) has noted the necessity of decontextualisation, depersonalisation and detemporalisation in logical reasoning. We draw attention to his prefix de- (as opposed to the alternative prefix a-). Balacheff does not call for apersonal, atemporal, acontextual language: he is not saying mathematics is devoid of context. Rather, mathematics requires the move from personal to impersonal, and, we add, the move back. Persons are central to such moves. These are moves between being situated in a physical and temporal context and truth independent of context. Just as mathematics is about the moves from the particular to general and back again, we see mathematisation as the moves between the personal and impersonal, between context and abstraction. Mathematics lives in this tension.

While these kind of moves are at the heart of mathematics, they are also part of any didactic situation, as Kang and Kilpatrick (1992) remind us in their consideration of the way mathematics textbooks function in school settings:

> knowledge is depersonalized and decontextualized when represented for communication, personalized and contextualized when first encountered, depersonalized and decontextualized again as it becomes part of the learner's codified knowledge. (p. 6)

Such 'didactic transposition' is perhaps most vivid in mathematics learning because of the abstraction and generality that are evident in the content, and, as we have shown, in the form of the linguistic representation, which reflects that content.

Though our textbooks do not typically recognise the moves we associate with mathematisation, we see room in textbook use for the recognition of mathematisation. In typical classrooms, the textbook is mediated through a person (the teacher) in a conversation amongst many persons (the students). In such a community, even if the textual material at hand insufficiently recognises the role of persons in mathematics, there is room to attend to persons and contexts. There is room to draw awareness to the dance of agency between particular persons (whether they are historical or modern, professional or novice mathematicians) and the apparently abstract, static discipline of mathematics. [9] For textbook writers, too, there is room for change. Considering this possibility, we wonder how students' experiences of mathematics would differ if their textbooks did more to recognise persons, their contexts and mathematisation.

Notes

[1] Sierpinska (1997) differentiates between a text's *mathematical layer* and its *didactic layer*. However, she does not draw attention to the way each informs the other.

[2] Morgan's (1996) linguistic analysis of students' mathematical writing draws on CDA scholarship and successfully denaturalizes aspects of the discursive practice. Her attention to the students' sense of audience and to the markers' determinations of student work uncovers significant power relations in classroom mathematics and assessment.

[3] Umberto Eco refers to this phenomenon as the development of the model reader. Sierpinska (1997) describes this phenomenon well.

[4] In line with Foucauldian analysis of discourse, which is seen as an archaeology, we refer to the analysed textbooks as artefacts: they are artefacts of current sociological systems and practice. Furthermore, our use of the word 'artefact' reminds us that future generations may use our current textbooks as artefacts to gain insight into our present culture, just as Schubring (1987) used mathematics textbooks from the French revolution to gain insight into that time.

[5] Drawings are *relatively* generic in comparison to photographs. The drawing of a boy may suggest particular socio-economic, cultural or ethnic identities, and thus represent a 'class of boys.'

[6] We thank Wee Tiong Seah for noting the possibility of this interpretation.

[7] In addition to teachers and other students, there are other people connected to the mathematics that is practised in classrooms – including mathematicians and people who use mathematics publicly, such as the press and politicians. McBride (1994) shows textbook excerpts that suggest mathematics is done independent of such cultural context. We argue that her analysis could be strengthened with linguistic tools such as the ones we use here. She does not show how individualism is promoted by the text. Though our framework does not preclude consideration of how texts position students in relation to public mathematics, we focus here on students' relations to the people closest to them in the classroom setting.

[8] Because we were interested in the reader's positioning, our findings all come from our examination of student editions. However, there are places in TMM's teacher edition that encourage teachers to have their students work together such as 'partner quizzes' and suggested group work.

[9] Pickering (1995), in his model for understanding scientific advancement, distinguishes between "individual", "material" and "disciplinary" agency. He calls generative tension between these agents a "dance of agency." His sense of the dance of agency has been applied to relatively local settings (mathematics classrooms) by Boaler (2002).

Acknowledgement

The analysis for this article was supported in part with funding from the Spencer Foundation (Spencer RTG at Michigan State University) and the writing of this manuscript was funded in part by the National Science Foundation ([NSF], Grant No. 0347906, Herbel-Eisenmann, Principal Investigator). Any opinions, findings, and recommendations expressed in this material are those of the author and do not necessarily reflect the views of the Spencer Foundation or the NSF.

References

Adler, J. (1998) 'A language of teaching dilemmas: unlocking the complex multilingual secondary mathematics classroom', *For the Learning of Mathematics* **18**(1), 24-33.

Balacheff, N. (1988, translator, Pimm, D.) 'Aspects of proof in pupils' practice of school mathematics', in Pimm, D. (ed.), *Mathematics, teachers and children*, London, UK, Hodder and Stoughton, pp. 216-235.

Boaler, J. (2002) 'The development of disciplinary relationships: knowledge, practice and identity in mathematics classrooms', *For the Learning of Mathematics* **22**(1), 42-47.

Brown, M. and Edelson, D. (2003) *Teaching as design: can we better understand the ways in which teachers use materials so we can better design materials to support changes in practice?*, Evanston, IL, Center for Learning Technologies in Urban Schools, Northwestern University.

Dowling, P. (1998) *The sociology of mathematics education: mathematical myths – pedagogic texts*, London, UK, Falmer.

Edwards, D. and Mercer, N. (1987) *Common knowledge*, New York, NY, Methuen.

Fairclough, N. (1995) *Critical discourse analysis: the critical study of language*, Harlow, UK, Pearson.
Frankenstein, M. (1989) *Relearning mathematics: a different third R – radical maths*, London, UK, Free Association.
Gerofsky, S. (1996) 'A linguistic and narrative view of word problems in mathematics education', *For the Learning of Mathematics* **16**(2), 36-45.
Herbel-Eisenmann, B. (in press) 'From intended curriculum to written curriculum: examining the "voice" of a mathematics textbook', *Journal for Research in Mathematics Education*.
Hodge, R. and Kress, G. (1993) *Language as ideology*, London, UK, Routledge and Kegan Paul.
Johansson, M. (2007) 'Mathematical meaning making and textbook tasks', *For the Learning of Mathematics* **27**(1), 45-51.
Kang, W. and Kilpatrick, J. (1992) 'Didactic transposition in mathematics textbooks', *For the Learning of Mathematics* **12**(1), 2-7.
Kress, G. (1990) 'Critical discourse analysis', *Annual Review of Applied Linguistics* **11**, 84-99.
Kress, G. (1993) 'Against arbitrariness: the social production of the sign as a foundational issue in critical discourse analysis', *Discourse and Society* **4**(2), 169-91.
Lappan, G., Fey, J., Fitzgerald, W., Friel, S. and Phillips, E. (1998) *Thinking with mathematical models: representing relationships*, Menlo Park, CA, Dale Seymour.
Lloyd, G. (1999) 'Two teachers' conceptions of a reform-oriented curriculum: implications for mathematics teacher development', *Journal of Mathematics Teacher Education* **2**(3), 227-252.
Love, E. and Pimm, D. (1996) '"This is so": a text on texts', in Bishop, A. *et al*. (eds), *International handbook of mathematics education: part one*, Dordrecht, The Netherlands, Kluwer, pp. 371-409.
MacLure, M. (2003) *Discourse in educational and social research*, Buckingham, UK, Open University Press.
McBride, M. (1989) 'A Foucauldian analysis of mathematical discourse', *For the Learning of Mathematics* **9**(1), 40-46.
McBride, M. (1994) 'The theme of individualism in mathematics education: an examination of mathematics textbooks', *For the Learning of Mathematics* **14**(3), 36-42.
McConnell, J., Brown, S., Usiskin, Z., Senk, S., Widerski, T., Anderson, S., Eddins, S., Feldman, C., Flanders, J., Hackworth, M., Hirschhorn, D., Polonsky, L., Sachs, L. and Woodward, E. (1998) *Algebra*, Menlo Park, CA, Scott Foresman Addison Wesley.
Morgan, C. (1996) '"The language of mathematics": towards a critical analysis of mathematics texts', *For the Learning of Mathematics* **16**(3), 2-10.
NCTM (2000) *Principles and standards for school mathematics*, Reston, VA, National Council of Teachers of Mathematics.
Otte, M. (1986) 'What is a text?', in Christiansen, B., Howson, A. and Otte, M. (eds), *Perspectives on mathematics education*, Boston, MA, D. Reidel, pp. 173-203.
Pickering, A. (1995) *The mangle of practice: time, agency and science*, Chicago, IL, University of Chicago.
Pimm, D. (1987) *Speaking mathematically: communication in mathematics classrooms*, London, UK, Routledge and Kegan Paul.
Radford, L. (2002) 'The seen, the spoken and the written: a semiotic approach to the problem of objectification of mathematical knowledge', *For the Learning of Mathematics* **22**(2), 14-23.
Rotman, B. (1988) 'Toward a semiotics of mathematics', *Semiotica* **72**(1/2), 1-35.
Rowland, T. (1992) 'Pointing with pronouns', *For the Learning of Mathematics* **12**(2), 44-48.
Rowland, T. (1999) 'Pronouns in mathematics talk: power, vagueness and generalization', *For the Learning of Mathematics* **19**(2), 19-26.
Rowland, T. (2000) *The pragmatics of mathematics education: vagueness in mathematical discourse*, New York, NY, Falmer Press.
Schubring, G. (1987) 'On the methodology of analysing historical textbooks: Lacroix as textbook author', *For the Learning of Mathematics* **7**(3), 41-51.
Sierpinska, A. (1997) 'Formats of interaction and model readers', *For the Learning of Mathematics* **17**(2), 3-11.
Wagner, D. (2007) 'Students' critical awareness of voice and agency in mathematics classroom discourse', *Mathematical Thinking and Learning* **9**(1), 31-50.
Zimmer, D., Kirkpatrick, C., Montesanto, R., Farentino, K., and Youngberg, J. (2000) *Mathematics 9*, Toronto, Canada, Nelson Thomson Learning.

[These references follow on from page 7 of the article "An onto-semiotic approach to representations in mathematics education" that starts on page 2 (ed.)]

References

Bloor, D. (1983) *Wittgenstein. A social theory of knowledge*, London, UK, The Macmillan Press.
Blumer, H. (1969) *Symbolic interactionism: perspective and method*, Englewood Cliffs, NJ, Prentice-Hall.
Chevallard, Y. (1992) 'Concepts fondamentaux de la didactique: perspectives apportées par une approache anthropologique', *Recherches en Didactique des Mathématiques* **12**(1), 73-112.
Contreras, A., Font, V., Luque, L. and Ordóñez, L. (2005) 'Algunas aplicaciones de la teoría de las funciones semióticas a la didáctica del análisis infinitesimal', *Recherches en Didactique des Mathématiques* **25**(2), 151-186.
D'Amore, B. (2005) 'Secondary school students' mathematical argumentation and Indian logic (nyaya)', *For the Learning of Mathematics* **25**(2), 26-32.
Duval, R. (2002) 'Representation, vision and visualization: cognitive functions in mathematical thinking. Basic issues for learning', in Hitt, F. (ed.), *Representations and mathematics visualization*, Proceedings of the North American Chapter of the International Group for the Psychology of Mathematics Education, Cinvestav-IPN, Mexico, pp. 311-335.
Eco, U. (1979) *Trattato di semiotica generale*, Milan, Italy, Bompiani.
Ernest, P. (1998) *Social constructivism as a philosophy of mathematics*, New York, NY, SUNY.
Godino, J. D. (2002) 'Un enfoque ontológico y semiótico de la cognición matemática.', *Recherches en Didactique des Mathématiques* **22**(2/3), 237-284.
Godino, J. D. and Batanero, C. (1998) 'Clarifying the meaning of mathematical objects as a priority area of research in mathematics education', in Sierpinska, A. and Kilpatrick, J. (eds), *Mathematics education as a research domain: a search for identity*, Dordrecht, The Netherlands, Kluwer Academic Publishers, pp. 177-195.
Godino, J. D., Batanero, C. and Roa, R. (2005) 'An onto-semiotic analysis of combinatorial problems and the solving processes by university students', *Educational Studies in Mathematics* **60**(1), 3-36.
Goldin, G. (2002) 'Representation in mathematical learning and problem solving', in English, L. (ed.), *Handbook of International Research in Mathematics Education*, London, UK, Lawrence Erlbaum, pp. 197-218.
Goldin, G. and Janvier, C. (1998) 'Representation and the psychology of mathematics education', *Journal of Mathematics Behaviour* **17**(1), 1-4.
Hjelmslev, L. (1961, original edition in Danish, 1943) *Prolegomena to a theory of language*, Madison, WI, University of Winconsin.
Presmeg, N. (1998) 'A semiotic analysis of students' own cultural mathematics', in Olivier, A. and Newstead, K. (eds), *Proceedings of the twenty-second annual conference of the International Group for the Psychology of Mathematics Education*, Stellenbosch, South Africa, University of Stellenbosch, **1**, pp. 136-151.
Radford, L. (1997) 'On psychology, historical epistemology and the teaching of mathematics: towards a socio-cultural history of mathematics', *For the Learning of Mathematics* **17**(1), 26-33.
Radford, L. (2003) 'On the epistemological limits of language. Mathematical knowledge and social practice in the Renaissance', *Educational Studies in Mathematics* **52**(2), 123-150.
Radford. L. (2006) 'The anthropology of meaning', *Educational Studies in Mathematics* **61**, 39-65.
Sfard, A. (2000) 'Symbolizing mathematical reality into being – or how mathematical discourse and mathematical objects create each other', in Cobb, P, Yackel, E. and McClain, K. (eds), *Symbolizing and communicating in mathematics classrooms*, London, UK, Lawrence Erlbaum, pp. 38-75.
Wilhelmi, M., Godino, J. D. and Lacasta, E. (2005) 'Didactic effectiveness of equivalent definitions of a mathematical notion. The case of the absolute value', *Fourth Congress of the European Society for Research in Mathematics Education* (CERME 4), http://cerme4.crm.es/Papers%20definitius/11/paperswg11.htm, accessed April 17, 2007.
Wittgenstein, L. (1958, second edition) *Philosophical investigations*, Oxford, UK, Basil Blackwell.